REVISION DATA				
SYM	ECN	DESCRIPTION	DATE	APPROVED

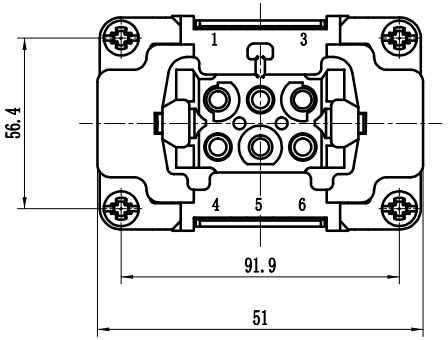

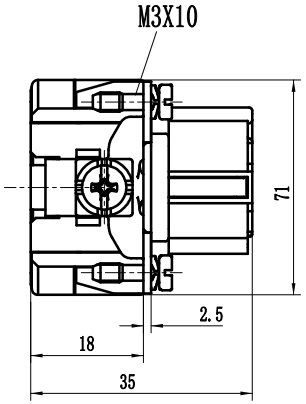

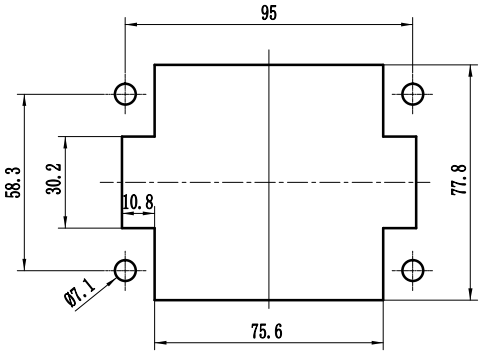

面板安装开孔图
Panel cut out

技术参数：
插芯：
插针数：6+PE
额定电流：16A
工作电压：500V
额定脉冲电压：6KV
污染等级：3
依据UL/CSA的额定电压：600/250V
绝缘阻抗：≥10^{10}Ω
材料：聚碳酸酯
温度范围：-40℃～+125℃
依据UL94的阻燃等级：V0
可插拔次数：≥500

插针：
接线方式：冷压连接
材料：铜合金
表面处理：镀银/镀金
接触电阻：≤1mΩ
线径范围：0.14-4.0mm（AWG26-12）
剥线长度：7mm

Specifications:
Inserts:
Number of contacts: 6+PE
Rated current: 16A
Rated voltage: 500V
Rated impulse voltage: 6KV
Pollution degree: 3
Rated voltage acc.to UL/CSA:600/250V
Insulation resistance: ≥10^{10}Ω
Material: Polycarbonate
Limiting temperatures: -40℃～+125℃
Flammability acc.to(UL94): V0
Mechanical working life -mating cycles: ≥500

Contacts:
Terminal: crimp terminal
Material: Brass
Surfac: hard-silver/hard-gold plated
Contact resistance: ≤1mΩ
Crimp terminal
Wire gauge--mm²:0.14-4.0mm² (AWG26-12)
Stripping length:7mm

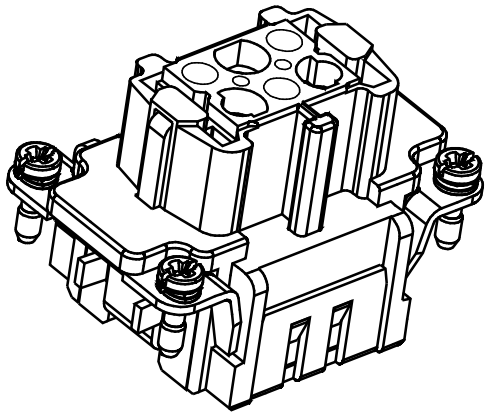

Tolerance		SIGNATURE	DATE	Units	mm	宁波欧科瑞连接器有限公司 NINGBO OUKERUI CONNECTOR CO.,LTD.		
0～≤20 ±0.15	DRAW			Size	A4			
20～≤50 ±0.25	DESIGN			Scale		PART NAME: HZW-HE-006-FC		
50～≤80 ±0.35	CHECK			Sheet		Drawing NO.		REV
80～≤120 ±0.50	APPROVE			Proj.		Material		A